THE CO-OPERATIVE ONUVERSITY OF KENYA (CUK)

SCHOOL OF COMPUTING AND MATHEMATICS

PROJECT PROPOSAL [*Proposal Only*]

A DATA-DRIVEN ANALYSIS MODEL FOR KENYA'S HEALTH FACILITY LANDSCAPE USING SOCIAL HEALTH AUTHORITY DATA.

BY

KELVIN MUTUKU MUTHAMA

BDATC01/0795/2022

SUPERVISOR: DR. NYALE

Project proposal submitted in partial fulfillment of the requirements of the award of the Bachelor of Science in Data Science

©JANUARY, 2026

DECLARATION

I hereby declare that this project proposal is my own work and has of my best knowledge, not been submitted to any other institution of higher learning for any award.

Student's Name: …….

Signature: ……. Date: …….

APPROVAL

This project proposal has been submitted with my approval as the university supervisor.

Supervisor's Name: …….

Signature: …….... Date: …….

ABSTRACT

Achieving Universal Health Coverage in Kenya requires a strategic planning based on accurate spatial analysis of healthcare infrastructure. This project proposes the development of a data-driven analytical model to assess Kenya's Health facility landscape using official data from the Social Health Authority. The model will transform raw ingested data into actionable insights through a systematic approach involving data ingestion, spatial analysis, and interactive visualization. The methodology will employ Python programming with libraries including pandas for data processing, geopandas for spatial analysis and streamlit for dashboard development. Key components will include, Data processing engine for cleaning SHA datasets, a spatial equity model for calculating facility-to-population ratios and a public-private analysis module for evaluating healthcare provision patterns. The expected outcomes of the model include an interactive dashboard that visualizes facility distribution, identifies underserved regions and provides evidence-based recommendations for resource allocation. The project will follow a structured development lifecycle, form requirements analysis implementation and testing. It is anticipated that the model will deliver a valuable decision-support tool for healthcare planners and policymakers, contributing to an equitable healthcare resources distribution across Kenya and its counties. The successful implementation of this project will demonstrate the practical application of data science in addressing real-world public health challenges while providing a comprehensive learning experience in system development and spatial analytics.

TABLE OF CONTENTS

DECLARATION i

ABSTRACT ii

TABLE OF CONTENTS iii

LIST OF ABBREVIATIONS v

LIST OF TABLES vi

LIST OF FIGURES vii

1 CAPTER ONE – INTRODUCTION 1

1.1 Background to the study 1

1.2 Statement of the Problem 1

1.3 Proposed solution 2

1.4 Objectives 2

1.4.1 General objective 3

1.4.2 Specific objectives 3

1.5 Significance of the study 3

1.6 Scope of the study 4

1.7 Assumptions 4

1.8 Limitations and delimitations 4

1.9 Definition of terms 5

2 CHAPTER TWO - LITERATURE REVIEW 6

2.1 Introduction 6

2.2 Related Systems 6

2.2.1 World Health Organization (WHO) Health Facility Registry 6

2.2.2 Kenya Master Health Facility List (KMHFL) 6

2.2.3 AfyaMap (Tanzania Health Facility Mapping System) 7

2.3 Limitations of existing systems (Weaknesses of the systems) 8
2.4 How my proposal solution will handle these weaknesses 9
3 CHAPTER 3 – METHODOLOGY 11
3.1 Introduction 11
3.2 Project Design 11
3.2.1 Development methodology 11
3.2.2 Justification methodology 11
3.2.3 System architecture 11
3.3 Design procedures 12
3.4 System requirements 14
3.4.1 Hardware requirements 14
3.4.2 Software requirements 14
3.5 Data Collection and Analysis Methods and Tools 15
3.5.1 Data Sources and Collection Methods 15
3.5.2 Data analysis methods 16
3.5.3 Tools for Analysis 16
APPENDICES 18
APPENDIX A: PROPOSED SCHEDULE 18
APPENDIX B: TOOL(S) FOR DATA COLLECTION 18
APPENDIX C: PROPOSED BUDGET 19
REFERENCES 21

LIST OF ABBREVIATIONS

1. CSV – Comma Separated Values
2. DFDs – Data Flow Diagram
3. ERDs – Entity-Relationship Diagram
4. FBOs – Faith Based Organizations
5. GIS – Geographical Information Systems
6. HDD – Hard Disk Drive
7. MOH – Ministry of Health
8. NGOs – Non-Government Organizations
9. KHF-LAM – Kenya Health Facility Landscape Analysis Model
10. KMHFL – Kenya Master Health Facility List
11. KNBS – Kenya National Bureau of Statistics
12. OSM – OpenStreetMap
13. RAM – Random Access Memory
14. SHA – Social Health Authority
15. SHA – Systems of Health Accounts
16. SSD – Solid State Drive
17. UHC – Universal Health Coverage
18. UML – Unified Modelling Language
19. WHO – World Health Organization

LIST OF TABLES

Table 1: Relevance of the proposed project based on related systems 8
Table 2: Data source and collection methods 16
Table 3: Tools for analysis and their justifications..... 17
Table 4: Proposed schedule..... 18
Table 5: Tool(s) for data collection 19
Table 6: Proposed budget..... 20

LIST OF FIGURES

Figure 1: Methodology overview..... 12
Figure 2: data flow diagram to illustrate how information flow through the system. 13
Figure 3: entity-relationship diagram for data modeling. 13
Figure 4: UML diagram (use case, sequence, and class diagram) for system specification 14

1 CAPTER ONE – INTRODUCTION

1.1 Background to the study

The achievement of Universal Health Coverage stands a primary objective within Kenya's healthcare policy framework, aiming at ensuring equitable access to quality and essential health services without financial hardship for all citizens. A fundamental condition for attaining this goal is the strategic and equitable distribution of health facilities across the country. The Kenya Health system comprises of facilities owned by diverse entities including the Ministry of Health (MOH), county government, private organizations, Faith-Based Organizations (FBOs) and non-government organizations. This diverse landscape provides both opportunities and challenges in providing health services.

A critical challenge in the health sector planning is the transformation of raw data into actionable insights for evidence-based decision-making. The SHA, established under the Kenya's health reform, serves as the national custodian of critical health system data, including a comprehensive registry of health facilities. This dataset represents a significant national asset with high potential to inform policy. However, in its raw and tabular format it offers limited utility for understanding complex spatial patterns, identifying coverage gaps, or simulating the impact of strategic interventions.

The field of data science offers powerful methodologies to address this gap. Techniques in geospatial analysis, statistical analysis and interactive data visualization enable the creation of sophisticated analytical models. Such models can systematically evaluate the density, distribution, equity and service capacity of health facilities relative to population needs. Therefore, this project is situated at the intersection of public health informatics and data science, proposing to leverage the SHA dataset to build a decision-support tool that can enhance the planning and management of Kenya's health facility infrastructure.

1.2 Statement of the Problem

Current approaches to analyzing Kenya's health facility landscape often rely on descriptive statistics and static reports generated from isolated datasets. These methods are insufficient for proactive, strategic planning as they fail to provide a holistic, integrated and interactive

view of the healthcare infrastructure. Consequently, policymakers, county health executives and planners lack a unified tool to answer critical, data-driven questions such as: Which counties exhibit the most severe disparities in in healthcare access based on facility-to-population rations? How does the mix of public and private healthcare provision vary geographically, and what are the implications for service affordability and UHC? Where should new infrastructure investments be prioritized to maximize population coverage and reduce existing inequities?

In the absence of a dedicated analytical model, a rich, detailed data housed by the SHA remains underutilized. This data-underuse leads to suboptimal resource allocation, persistent geographical and socioeconomic inequalities in the healthcare access, and inability to perform predictive scenario analysis for the infrastructure development. There exists a significant gap between data availability and strategic insight. This project, therefore, seeks to address this gap by designing and developing a robust, data-driven analytical model that synthesizes SHA data with other relevant datasets to generate quantifiable metrics, visual insights and evidence-based recommendations for improving Kenya's health facility landscape.

1.3 Proposed solution

This study proposes the design and development of a modular, data-driven analytical model named the Kenya Health Facility Landscape Analysis Model (KHF-LAM). The model will utilize the official health facility dataset from the SHA as its primary input. The solution is conceptualized as a software- based analytical framework comprising several integrated modules: a data ingestion and harmonizing engine to process raw data; a spatial equity and access scoring module to compute and map disparities in healthcare coverage; a public-private provision analysis module to evaluate the composition of service delivery; and a resource optimization simulator to propose data-informed recommendations for new facility placement or upgrades. The final deliverable will be ana interactive web-based dashboard built using the Streamlit framework, which will visualize all findings and provide an intuitive interface for stakeholders to explore data, filter views and conduct basic scenario analysis.

1.4 Objectives

1.4.1 General objective

To design and develop a data-driven analytical model that evaluates the distribution, equity and service capacity of health facilities in Kenya using data from the SHA, thereby supporting evidence-based strategic planning in the health sector.

1.4.2 Specific objectives

To design and implement a data processing engine for ingesting, cleaning, validating and harmonizing the raw SHA health facility dataset.

1. To develop a spatial equity analysis module that calculates facility-to-population ratios, generates accessibility scores and creates visualizations of distributions across all 47 counties.
2. To create a public-private partnership (PPP) analysis module that evaluates the market structure of health service provision and identifies regions with high potential for targeted investment or intervention.
3. TO design and deploy an interactive dashboard that integrates the model's outputs, providing a user-friendly tool for data exploration, visualizations and the generation of actionable reports.

1.5 Significance of the study

The study holds significance for multiple stakeholders in Kenya's health ecosystem. For national and county government policymakers, including officials at the SHA and MOH, the model will provide an evidence-based tool for identifying underserved regions, optimizing resource allocation., and planning new health infrastructure, directly supporting UHC goals. County health departments will benefit from a tailored view of their jurisdiction's facility landscape, enabling better local planning and advocacy. Researchers and academicians in public health and data science will gain access to a novel methodological framework and open-source analytical tool that can be extended or adapted for further studies. Development partners and NGOs operating in the health sector can use the insights to target their programs more effectively. For the student researcher, this project presents a capstone application of data science, software engineering and system analysis

skills to a complex, real-world problem, significantly enhancing technical proficiency and problem-solving capabilities.

1.6 Scope of the study

The scope of this study is explicit defined by the following boundaries. The data scope is limited to the health facility datasets available on the SHA website (https://sha.go.ke/resources/categories/4) as of the 2024 academic year and publicly available county population data from the Kenya National Bureau of Statistics (KNBS). The functional scope encompasses the development of the KHF-LAM analytical model and interactive dashboard. The model will focus on analyzing facility attributes (type, ownership, location), their spatial distribution, and delivered metrics like population coverage. It will not include analysis of patient-level ratios, real-time facility utilization or, occupancy rates, staff-to-patient ratios, detailed financial costing of the recommendations, or the development of real-time, transactional system. The dashboard will be a prototype for demonstration and analytical purposes.

1.7 Assumptions

The study is premised on key assumptions:

1. The data provided by SHA is sustainably accurate, current and representative of the operational health facility landscape in Kenya.
2. The geographical coordinates (Latitude and longitude) for facilities within the dataset are correct and can be reliably
3. The population data obtained from KNBS is the accurate and appropriate for calculating county-level facility-to-population ratios.
4. A facility's listing in the SHA registry is anonymous with it being operational and providing services.
5. The availability of standard software tools and libraries and adequate computational resources for development and testing.

1.8 Limitations and delimitations

The project acknowledges certain limitations. The accuracy and completeness of the model's outputs are contingent upon the quality of the input SHA data, which may contain

inconsistencies, missing values or outdated information. The spatial accessibility metrics may be simplistic, as they do not account for real-world travel conditions, terrain or transportation networks due to data constraints. To mitigate these limitations, the study will employ rigorous data validation and cleaning procedures, clearly document all data assumptions, and use established transparent methodologies for calculating metrics.

The study is deliberately delimited in the following ways: it is a static analysis based on a snapshot of data point in time rather than a dynamic, real-time monitoring system; it focuses on facility presence and distribution rather than the quality services rendered; and it is designed as a descriptive and diagnostic tool to inform planning, not an operational tool for daily facility management.

1.9 Definition of terms

1. Data-Driven Model – A computational and statistical framework that uses data as the fundamental input to identify patterns, perform analysis, and generate predictive or prescriptive insights.
2. Health Facility Landscape – The comprehensive configuration of health facilities within a defined geographical area, encompassing their number, types, ownership, spatial distribution, and service capabilities.
3. Spatial Equity – The degree to which health resources (e.g., facilities) are distributed fairly across a geographical area in proportion to the needs of the population residing in different parts of that area.
4. Social Health Authority (SHA) – A state corporation in Kenya established under the Health Act, responsible for managing the national health insurance fund and maintaining key health sector databases.
5. Interactive Dashboard – A data visualization tool that displays key performance indicators (KPIs) and metrics, allowing users to interact with the data through filters, drill-downs, and other controls to explore information dynamically.
6. Universal Health Coverage (UHC) – A World Health Organization (WHO) goal that ensures all people have access to the full range of quality health services they need, when and where they need them, without financial hardship.

2 CHAPTER TWO - LITERATURE REVIEW

2.1 Introduction

In this chapter comprehensive review of existing literature, systems and methodologies related to health facility mapping, spatial analysis in healthcare and data-driven decisions support systems will be presented. The review explores both global and local contexts to establish the theoretical foundation for developing a data-driven analytical model for the Kenya's health landscape. It examines the evolution of Geographical information Systems (GIS) in the healthcare planning, existing health facility assessment tools and identifies gaps that the proposed model aims to address.

2.2 Related Systems

2.2.1 World Health Organization (WHO) Health Facility Registry

The WHO maintains a global health facility registry that serves standardized directory of health facilities worldwide. The system provides basic information about facility locations, types and services offered. The registry built on the Systems of Health Accounts (SHA) framework and aims to support health systems strengthening through improved facility data management (World Health Organization, 2021). However, its application in Kenya has been limited by inconsistent data updates and lack of integration with local planning systems. The system primarily serves as a reporting tool rather than an analytical platform for strategic decision-making.

2.2.2 Kenya Master Health Facility List (KMHFL)

The Kenya Master Facility List, maintained by the Ministry of Health, represents the official national registry of all health facilities in Kenya. This system captures comprehensive data including facility ownership, services offered and geographical coordinates. While the KMHFL serves as the primary reference for facility identification, it lacks advanced analytical capabilities. The system provides static reports and basic functions but does not offer spatial analysis, equity scoring or predictive modeling features. Users cannot perform comparative analyses across countries or simulate the impact of new facility placements.

2.2.3 AfyaMap (Tanzania Health Facility Mapping System)

Developed for Tanzania's health sector. AfyaMap is a web-based GIS platform that visualizes health facility distribution and services availability. The system integrates multiple data sources including facility locations, population data and epidemiological information (Zinszer et al., 2020). AfyaMap interactive mapping capabilities, service coverage analysis, and gap identification features. However, its architecture is specific to Tanzania's administrative structure and health system organization, requiring significant adaptation for application in Kenya. Additionally, the system focuses more on visualization than on predictive analysis or optimization modeling.

System Name	Development or Country	Key Features	Limitations	Relevance to proposed solution
Kenya Master Health Facility List	Ministry of Health, Kenya	1. National registry of all health facilities 2. Facility categorization by type and level 3. Basic search and filtering capabilities	1. Static data preparation 2. No spatial analysis tool 3. Limited data visualization 4. Manual updates required	Provides baseline data for analysis; proposed model will add analytical capabilities to this foundational data
World Health Organization	World Health Organization, Global	1. International standardization 2. Cross-Country	1. Generic framework not customized for Kenya.	Offers international best practices that can be adapted for

		compatibility 3. Integration with global health indicators	2. Limited local context integration. 3. Slow update cycles	the Kenyan context in the proposed model
AfyaMap Tanzania	Ministry of Health, Tanzania	1. Interactive web-based mapping 2. Service coverage analysis 3. Integration with population data	1. Country-specific. 2. Limited predictive analysis 3. Requires significant customization for Kenya	Demonstrates successful implementation of GIS in East Africa; Provides design insights for Kenyan adaptations

Table 1: Relevance of the proposed project based on related systems

2.3 Limitations of existing systems (Weaknesses of the systems)

1. Limited Analytical Capabilities: Existing systems primarily function as data repositories with basic query and reporting features. They lack sophisticated analytical modules for spatial equity analysis, predictive modeling and optimization algorithms that could support strategic planning.
2. Static Data Representation: Current systems provide snapshots of facility data without dynamic updating or real-time integration with other data sources. This limits their utility for monitoring changes in healthcare access patterns or evaluating the impacting of policy interventions over time.
3. Poor user interactivity: Most existing health facility systems offer limited user interaction capabilities. Users cannot customize views, perform scenario analysis,

or generate tailored reports based on specific planning questions or regional priorities.

4. Insufficient integration with planning processes: The systems operate in isolation from actual health planning workflows. There is minimal integration with resource allocation systems, budgeting processes or performances monitoring frameworks, reducing their practical utility for decision-makers.
5. Lack of predictive and prescriptive features: Current systems are descriptive rather than predictive or prescriptive. They show what exists but cannot forecast future needs, identify optimal locations for new facilities or recommend specific interventions to address coverage gaps.

2.4 How my proposal solution will handle these weaknesses

The proposed Kenya Health Facility Landscape Analysis Model addresses these limitations through several innovation approaches which include:

1. Adavanced analytical Engine: KHF-LAM integrates modular analytical components including spatial equity scoring algorithms, facility clustering analysis and optimization models. These features transform raw data into actionable insights that support decision making.
2. Dynamic data processing: The system implements automated data validation, cleaning, updating mechanisms. It can integrate multiple data sources including SHA data, population statistics and geographical information to create a comprehensive and up-to-date view of the health facility landscape.
3. Interactive dashboard interface: Using streamlit frameworks, KHF-LAM provides an intuitive, web-based dashboard that allows users to interact with data through filters, custom visualizations and scenario simulation tools. This facilitates the practical application of analytical insights in budget allocation, infrastructure planning and performance monitoring processes.
4. Predictive and prescriptive capabilities: Beyond descriptive analysis, KHF-LAM includes modules for project future needs based on population growth trends and recommending optimal locations for new facilities using multi-criteria decision analysis techniques.

3 CHAPTER 3 – METHODOLOGY

3.1 Introduction

This chapter outlines the systematic approach that will be employed to design, develop and implement the proposed data-driven analytical model. The methodology follows a structured software development lifecycle, integrating principles from data science, geospatial analysis and human computer interaction. The approach ensures that the project objectives are met through rigorous planning, execution and validation processes.

3.2 Project Design

3.2.1 Development methodology

The project will adopt the Agile-Scrum methodology with increment development phases. This iterative approach allows for regular feedback incorporation, adaptive planning and continuous improvement throughout the development process. The methodology is particularly suitable for this project because of its emphasis on user-centric design, flexibility in responding to changing requirements and emphasis on delivering working software in short cycles.

3.2.2 Justification methodology

The Agile-Scrum methodology is justified for several reasons. First, the project involves multiple stakeholder perspectives that require continuous alignment. Second, the development of analytical modules benefits from iterative testing and refinement. Third, the methodology supports risk management through regular review and adaptation. Finally, it ensures that the final product closely matches user needs through continuous stakeholder engagement.

3.2.3 System architecture

The model will follow a modular, three architecture consisting of:

1. Data layer: Responsible for data ingestion, storage and preprocessing using SQLite databases and Pandas data frames.
2. Analytical layer: contains the core analytical modules implemented in Python.

3. Presentation layer: The interactive web-based dashboard built with streamlit framework for data visualization and user interaction

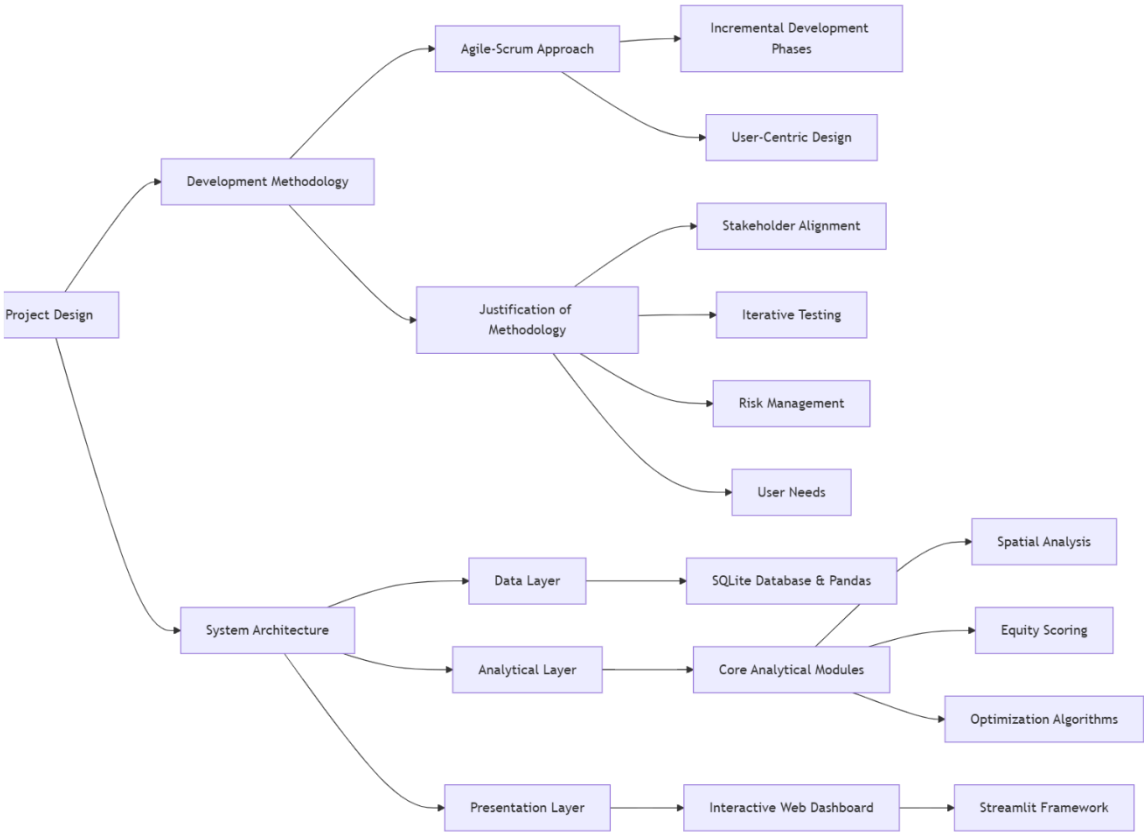

Figure 1: Methodology overview

3.3 Design procedures

The design will follow the following procedures:

1. Requirement analysis: It will conduct stakeholder needs assessment through literature review and consultation with the healthcare planning experts to define functional and non-functional requirements.
2. System design:
   a) Data Flow Diagram (DFD)

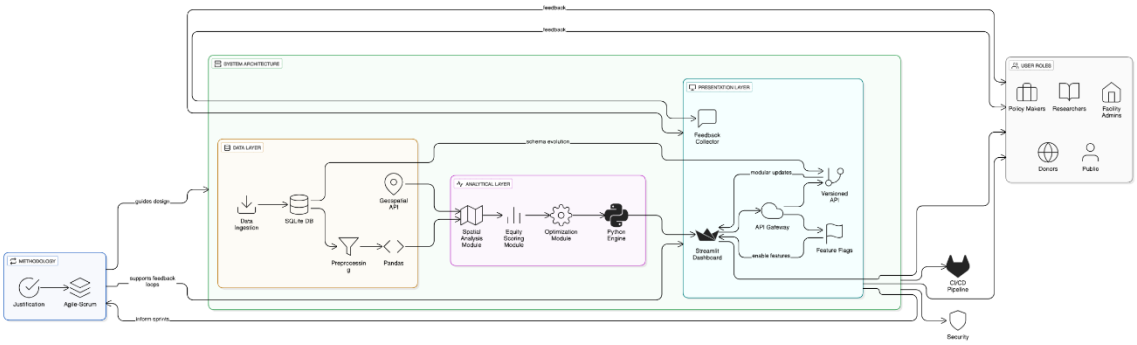

Figure 2: data flow diagram to illustrate how information flow through the system.

b) entity-relationship diagram (ERD)

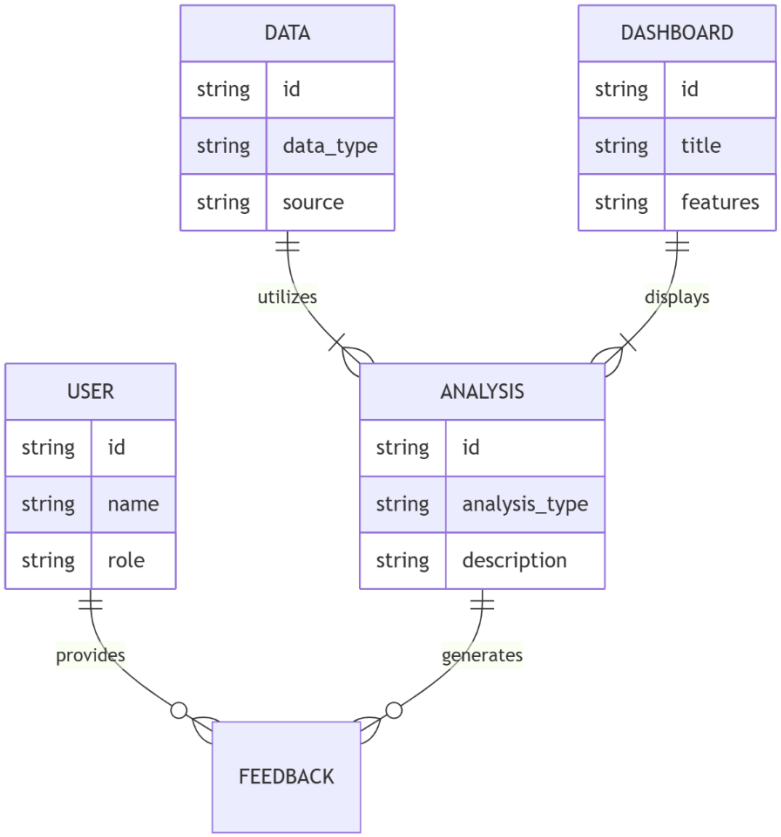

Figure 3: entity-relationship diagram for data modeling.

c) Unified Modelling Language (UML)

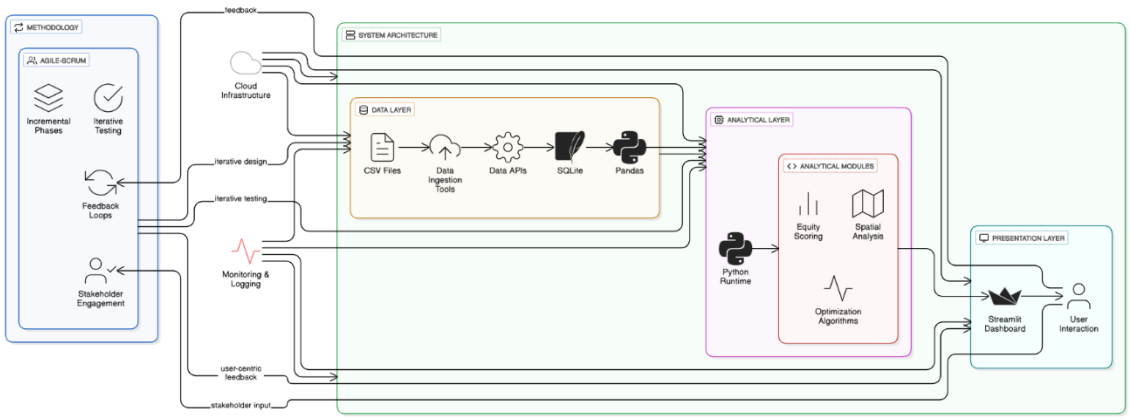

Figure 4: UML diagram (use case, sequence, and class diagram) for system specification

3. Module development: Implement the systems in modular:
   - Data preprocessing module.
   - Spatial analysis and mapping module
   - Equity scoring and gap analysis module
   - Dashboard and visualization module
4. Integration and testing: Integrate individual modules and conduct comprehensive testing including unit, interrogation and user acceptance testing.

3.4 System requirements

3.4.1 Hardware requirements

1. Processor – Intel Core i5 and above.
2. Memory – Random Access Memory (RAM) of 8GB (minimum), 16GB (recommended)
3. Storage – 500 Hard Disk Drive (HDD) or 256 Solid State Drive (SSD)
4. Display – 1366x768 resolution

3.4.2 Software requirements

1. Operating System: Windows 10/11, Linux Ubuntu 20.04+, or macOS 10.15+
2. Development Environment: Python 3.9+, Jupyter Notebook
3. Key Libraries: Pandas 1.4+, GeoPandas 0.12+, Streamlit 1.22+, Plotly 5.14+,
4. Folium 0.14+
5. Database: SQLite 3.37+

6. Version Control: Git 2.35+

3.5 Data Collection and Analysis Methods and Tools

3.5.1 Data Sources and Collection Methods

1. Primary Data Source: Health facility data will be collected from the Social Health Authority (SHA) website through direct download of Comma Separated Values (CSV) or Excel files from the resources portal.
2. Secondary Data Sources:
   Population data from Kenya National Bureau of Statistics (KNBS)
   County boundary shapefiles from Kenya Open Data Portal
   Road network data from OpenStreetMap (OSM)
3. Collection Tools: Web scraping scripts (using BeautifulSoup or Scrapy) may be developed for automated data retrieval, complemented by manual downloads for verification.

Data Type	Source	Collection Method	Frequency	Expected Volume
Health Facility Data	Social Health Authority	Direct download from SHA portal	Once (with updates as needed)	10000+ facilities
Population Data	Kenya National Bureau of Statistics	API access or manual download	Once	47 countries data
Geographic Boundaries	Kenya Open Data Portal	Shapefile download	Once	County/ Subcounty polygons
Road Networks Data	OpenStreamMap	API query/ Download	Once	National road networks

Validation Data	Field Verification	Manual verification of 50 facilities	Once	50 facility records

Table 2: Data source and collection methods

3.5.2 Data analysis methods

1. Descriptive Statistics: Measures of central tendency and dispersion for facility characteristics.
2. Spatial Analysis: Network analysis for accessibility measurement, kernel density estimation for facility clustering, and choropleth mapping for visualization.
3. Equity Analysis: Calculation of Gini coefficients, Lorenz curves, and facility to-population ratios.
4. Predictive Modeling: Linear regression for demand forecasting based on population trends.

3.5.3 Tools for Analysis

1. Data Processing: Python (Pandas, NumPy)
2. Spatial Analysis: GeoPandas, PySAL, NetworkX
3. Visualization: Matplotlib, Seaborn, Plotly, Folium
4. Optimization: SciPy, PuLP
5. Dashboard Development: Streamlit

Component	Technology	Version	Purpose	Justification
Programming language	Python	3.9+	Core development language	Rich ecosystem of data science libraries
Data processing	Pandas	1.5.0+	Data manipulation and analysis	Efficient handling of large datasets

Spatial Analysis	Geopandas	0.12.0+	Geographical data processing	Specialized for spatial analysis
Visualization	Plotly and Folium	5.13.0+	Interactive maps and charts	Web friendly interactive visualizations
Dashboard	Streamlit	1.22.0+	Web application framework	Rapid development of data apps

Table 3: Tools for analysis and their justifications

APPENDICES

APPENDIX A: PROPOSED SCHEDULE

Items of work/ activities	**Months**											
	1	**2**	**3**	**4**	**5**	**6**	**7**	**8**	**9**	**10**	**11**	**12**
Conceptualization and Scoping of Project Title												
Proposal writing and submission to SCM												
System Development												
Project Report Writing												
Project Presentation and Submission												
Corrections and final submission												

Table 4: Proposed schedule

APPENDIX B: TOOL(S) FOR DATA COLLECTION

Tool	**Purpose**	**Source/ Target**
SHA data download script	Automated retrieval of facility data from SHA website	Social Health Authority Portal
KNIBS API integration	Programmatic access to population statistics	Kenya National Bureau of Statistics

OpenStreetMap Downloader	Extraction of road network and geographical features	OpenStreetMap Database
Data Validation Checklist	Manual verification of data completeness and accuracy	Local Health Authorities

Table 5: Tool(s) for data collection

APPENDIX C: PROPOSED BUDGET

S. No.	Item	Specifications	Quantity	Unit Price (Ksh)	Amount (Ksh)
1	Development Resources				
	Laptop Computer	Core i5,16GB RAM, 512GB SSD	1	85000	85000
	Software Licenses	Development tools and libraries	1	5000	5000
2	Data Collection				
	Internet Bundles 3 Documentation	4G connectivity for research	12 months	2000	24000
	Data Purchases	Specialized datasets if needed	1	10000	10000
3	Documentation				
	Printing paper	A4, high quality	8 reams	550	4400
	Data Purchases	Specialized datasets if needed	1	10000	10000
	Printer toners	Compatible cartridges	3 copies	4500	13500
	Binding and Cover	Professional spiral binding	4 copies	800	3200
4	Field Work				
	Transport	Site visits and consultations	20 trips	500	10000

	Communication	Airtime and consultation fees	-	5000	5000
	Contingency	Unforeseen expenses	10% of total	-	15510
	Total				155100

Table 6: Proposed budget

REFERENCES

Ahasan, R., & Alam, M. S. (2020). Leveraging GIS and spatial data in healthcare planning: A review of applications in developing countries. International Journal of Health Geographics, 19(1), 1-15.

Gitonga, E. K. (2022). Health facility mapping and spatial accessibility analysis in Kenya: Challenges and opportunities. Kenya Institute of Public Policy Research and Analysis.

Kiplagat, J., Mwangi, W., & Chege, M. (2021). Spatial distribution of healthcare facilities in Kenya: An equity analysis. East African Medical Journal, 98(4), 3200-3212.

Maina, J., Ouma, P. O., Macharia, P. M., Alegana, V. A., Mitto, B., Fall, I. S., ... & Okiro, E. A. (2019). A spatial database of health facilities managed by the public health sector in sub-Saharan Africa. Scientific Data, 6(1), 1-8.

Ministry of Health, Kenya. (2023). Kenya Health Facility Assessment Report 2022. Government Press.

MOH & SHA. (2023). Social Health Authority Data Portal: Technical Documentation. Social Health Authority.

Nyaberi, D., & Okello, G. (2021). Adoption of health information systems in Kenyan county governments: Challenges and opportunities. African Journal of Health Informatics, 7(2), 45-58.

Ouma, P. O., Maina, J., Thuranira, P. N., Macharia, P. M., Alegana, V. A., English, M., ... & Snow, R. W. (2018). Access to emergency hospital care provided by the public sector in sub-Saharan Africa in 2015: A geocoded inventory and spatial analysis. The Lancet Global Health, 6(3), e342-e350.

Waweru, K., Muthoni, L., & Kamau, E. (2022). Integrating health information systems with planning processes: Lessons from Kenya's devolved healthcare system. Journal of Health Planning and Management, 37(3), 890-905.

World Health Organization. (2021). Global report on health facility mapping: Methods, tools, and applications. WHO Press.

Zinszer, K., Juma, P. A., & Mwang, I. (2020). Geospatial analysis of health facilities in East Africa: A comparative study of Kenya, Tanzania, and Uganda. East African Medical Journal, 97(4), 1450-1462.